Chapter 4
- Access Control -

2025년 2학기

한양대학교 컴퓨터소프트웨어학부
임을규

Access Control

ITU-T Recommendation X.800 defines access control as follows:

"The prevention of unauthorized use of a resource, including the prevention of use of a resource in an unauthorized manner."

Access Control Principles

RFC 2828 defines computer security as:

"Measures that implement and assure security services in a computer system, particularly those that assure access control service".

Relationship Among Access Control and Other Security Functions

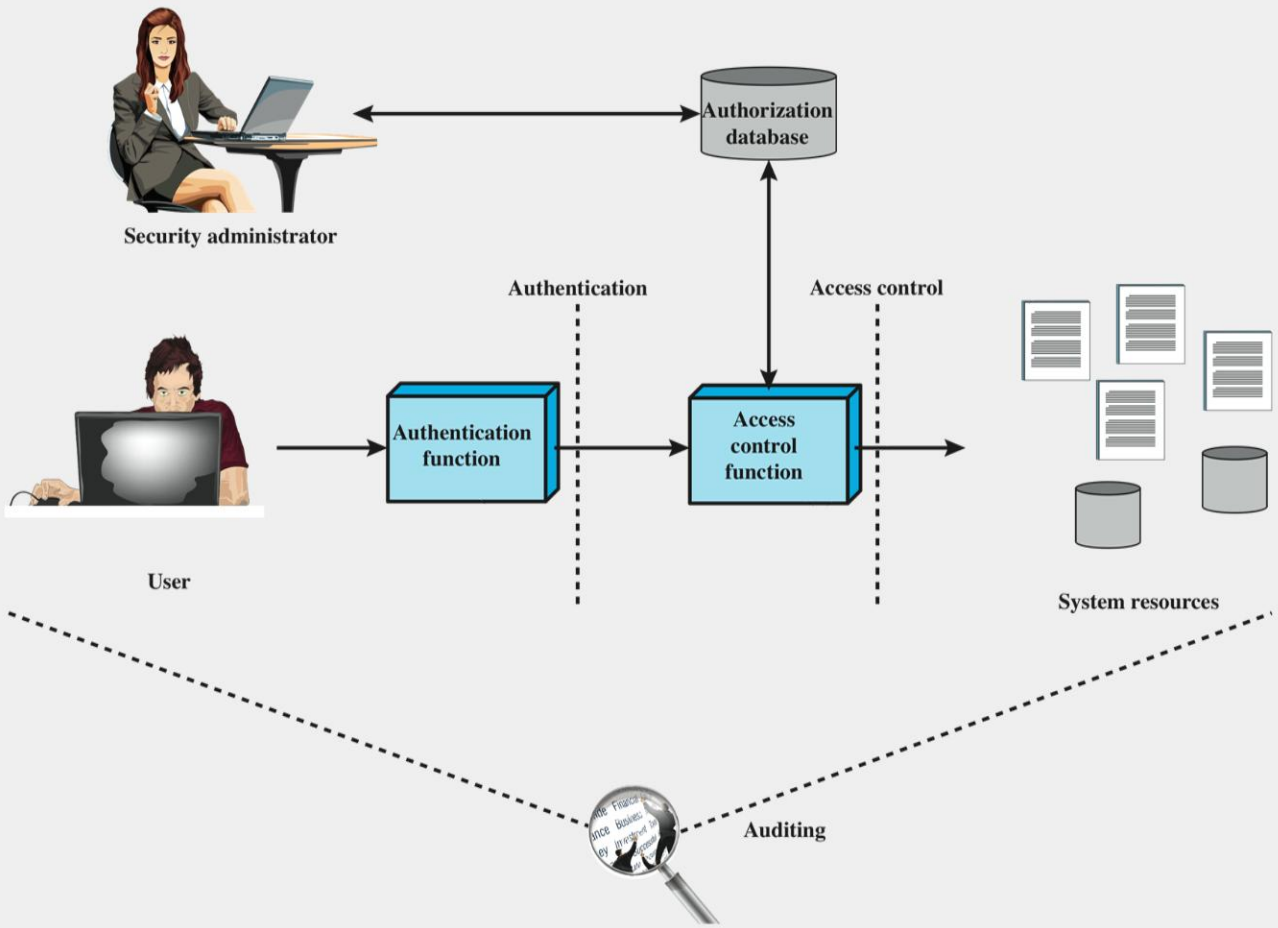

Figure 4.1 Relationship Among Access Control and Other Security Functions

Access Control Policies

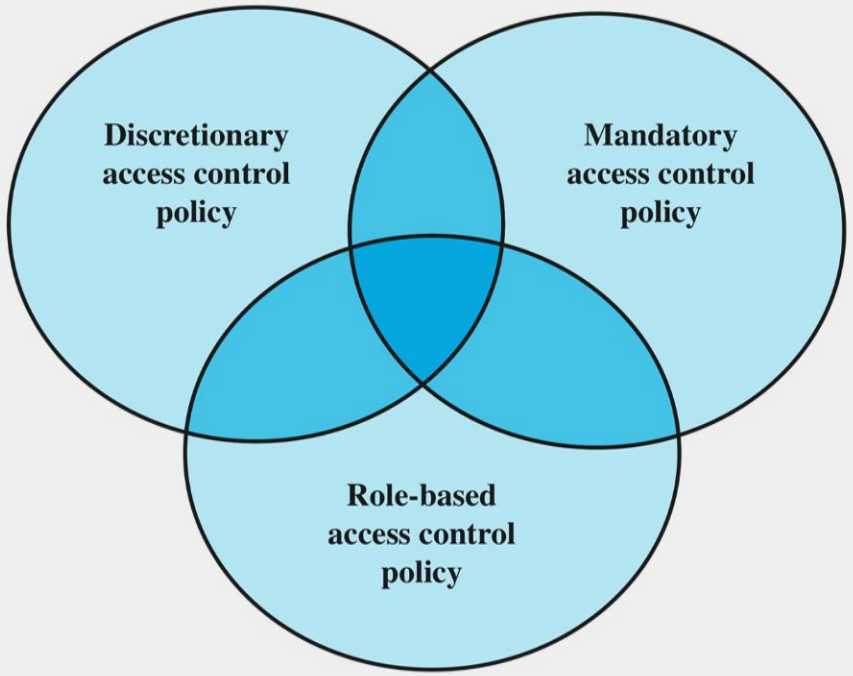

Figure 4.2 Multiple Access Control Policies. DAC, MAC, and RBAC are not mutually exclusive. A system may implement two or even three of these policies for some or all types of access. [SAND94]

Access Control Requirements

- reliable input
- support for fine and coarse specifications
- least privilege
- separation of duty
  - requires more than one person to complete a task
- open and closed policies
- policy combinations and conflict resolution
- administrative policies
  - policy development procedure, …

Access Control Basic Elements

subject – entity capable of accessing objects

- concept equates with that of process
- typically held accountable for the actions they initiate
- often have three classes: owner, group, world

object – resource to which access is controlled

- entity used to contain and/or receive information
- protection depends on the environment in which access control operates

access right – describes the way in which a subject may access an object

- e.g. read, write, execute, delete, create, search

Mandatory Access Control

- **Mandatory access control** is a more restrictive scheme
  - does not allow users to define permissions on files, regardless of ownership.
  - Instead, security decisions are made by a central policy administrator.
- Each security rule consists of a **subject,** which represents the party attempting to gain access, an **object,** referring to the resource being accessed, and a series of permissions that define the extent to which that resource can be accessed.
- **Security-Enhanced Linux (SELinux)** incorporates mandatory access control.

SELinux and MAC

- Every process and system resource has a special security label called an *SELinux context* (a.k.a. *SELinux lable*).
- The SELinux policy uses these contexts in a series of rules
  - which define how processes can interact with each other and the various system resources.
  - By default, the policy does not allow any interaction unless a rule explicitly grants access.
- SELinux contexts have several fields: user, role, type, and security level.
  - The SELinux type information is perhaps the most important
  - when it comes to the SELinux policy, as the most common policy rule uses SELinux types and not the full SELinux context.

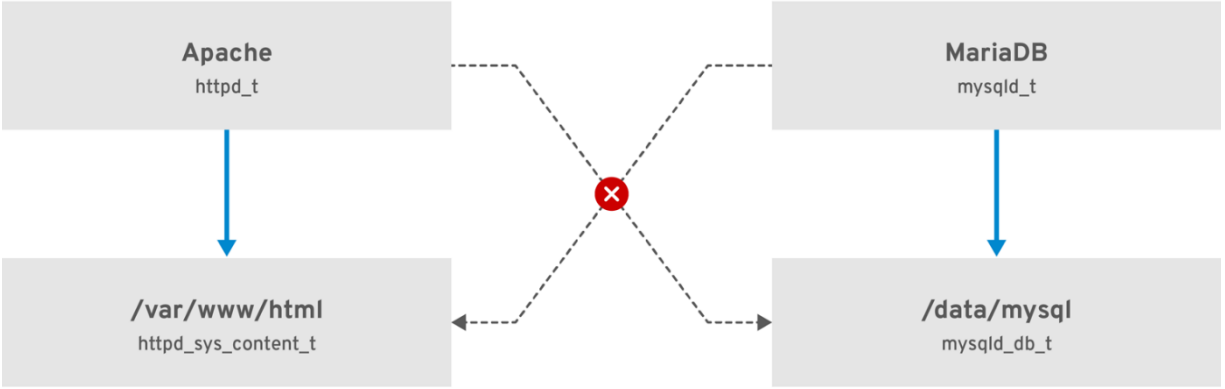

RHEL_467048_0218

Discretionary Access Control (DAC)

- scheme in which an entity may enable another entity to access some resource
- often provided using an access matrix
  - one dimension consists of identified subjects that may attempt data access to the resources
  - the other dimension lists the objects that may be accessed
- each entry in the matrix indicates the access rights of a particular subject for a particular object

Access Matrix

		OBJECTS			
		File 1	File 2	File 3	File 4
SUBJECTS	User A	Own Read Write		Own Read Write	
	User B	Read	Own Read Write	Write	Read
	User C	Read Write	Read		Own Read Write

(a) Access matrix

Example of Access Control Structures

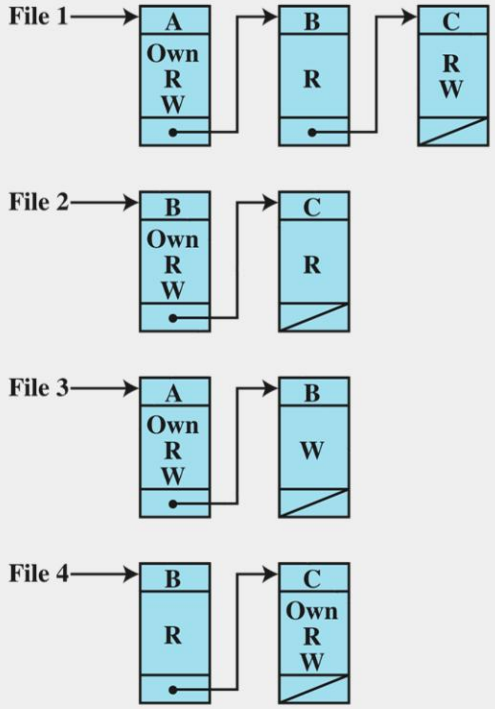

(b) Access control lists for files of part (a)

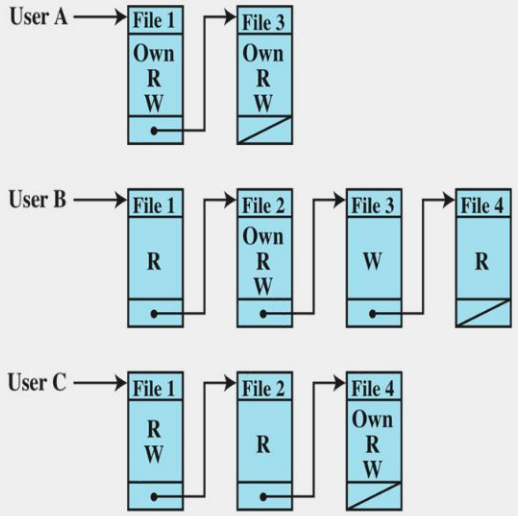

(c) Capability lists for files of part (a)

Figure 4.4

Extended Access Control Matrix

		OBJECTS								
		subjects			files		processes		disk drives	
		S_1	S_2	S_3	F_1	F_2	P_1	P_2	D_1	D_2
SUBJECTS	S_1	control	owner	owner control	read *	read owner	wakeup	wakeup	seek	owner
	S_2		control		write *	execute			owner	seek *
	S_3			control		write	stop			

* - copy flag set

Figure 4.4 Extended Access Control Matrix

Figure 4.5

Access Control Function

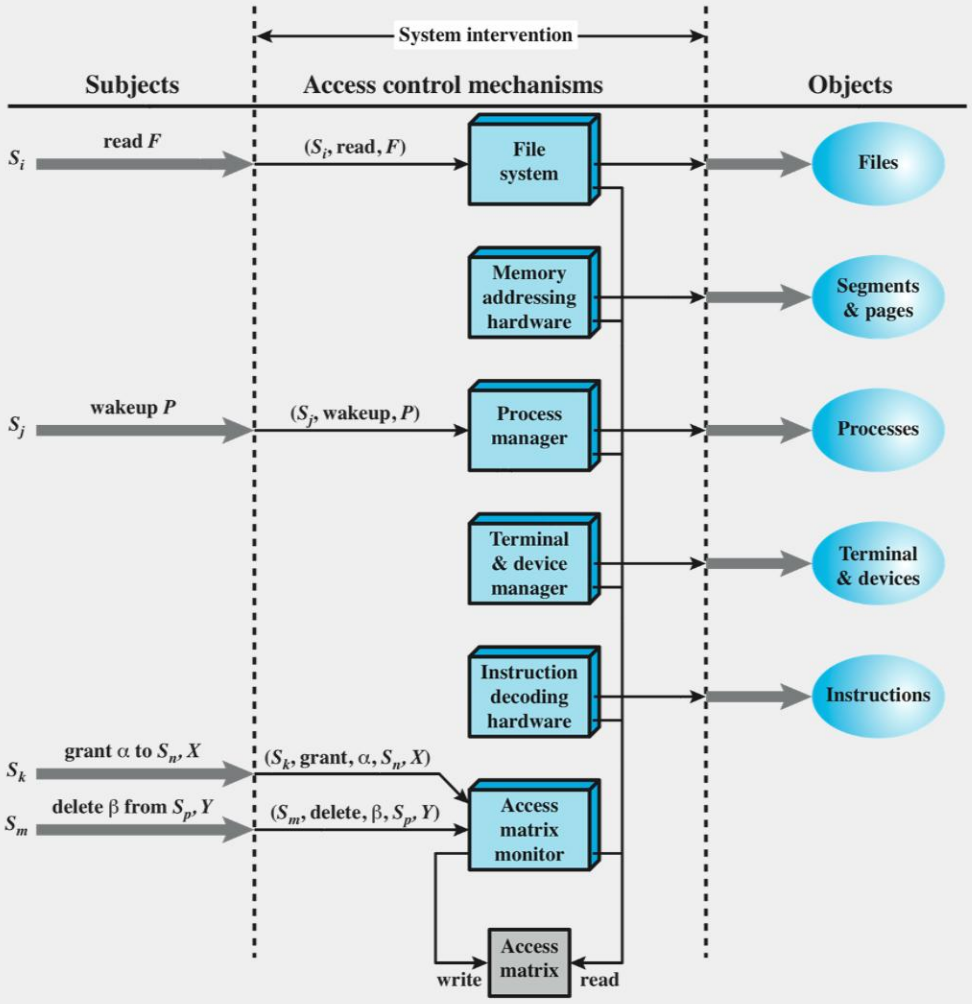

Figure 4.5 An Organization of the Access Control Function

Rule	Command (by S_o)	Authorization	Operation
R1	**transfer** $\begin{Bmatrix} \alpha * \\ \alpha \end{Bmatrix}$ **to** S, X	'α*' in $A[S_o, X]$	store $\begin{Bmatrix} \alpha * \\ \alpha \end{Bmatrix}$ in $A[S, X]$
R2	**grant** $\begin{Bmatrix} \alpha * \\ \alpha \end{Bmatrix}$ **to** S, X	'owner' in $A[S_o, X]$	store $\begin{Bmatrix} \alpha * \\ \alpha \end{Bmatrix}$ in $A[S, X]$
R3	**delete** α **from** S, X	'control' in $A[S_o, S]$ or 'owner' in $A[S_o, X]$	delete α from $A[S, X]$
R4	$w \leftarrow$ **read** S, X	'control' in $A[S_o, S]$ or 'owner' in $A[S_o, X]$	copy $A[S, X]$ into w
R5	**create object** X	None	add column for X to A; store 'owner' in $A[S_o, X]$
R6	**destroy object** X	'owner' in $A[S_o, X]$	delete column for X from A
R7	**create subject** S	none	add row for S to A; execute **create object** S; store 'control' in $A[S, S]$
R8	**destroy subject** S	'owner' in $A[S_o, S]$	delete row for S from A; execute **destroy object** S

Table 4.2

Access Control System Commands

Protection Domains

- set of objects together with access rights to those objects
- more flexibility when associating capabilities with protection domains
- in terms of the access matrix, a row defines a protection domain
- user can spawn processes with a subset of the access rights of the user
  - association between a process and a domain can be static or dynamic
  - in user mode certain areas of memory are protected from use and certain instructions may not be executed
  - in kernel mode privileged instructions may be executed and protected areas of memory may be accessed

UNIX File Access Control

UNIX files are administered using i-nodes (index nodes)

- control structures with key information needed for a particular file
- several file names may be associated with a single i-node
- an active i-node is associated with exactly one file
- **file attributes, permissions and control information are sorted in the i-node**
- on the disk there is an i-node table, or i-node list, that contains the i-nodes of all the files in the file system
- **when a file is opened its i-node is brought into main memory and stored in a memory resident i-node table**

directories are structured in a hierarchical tree

- **may contain files and/or other directories**
- **contains file names plus pointers to associated inodes**

UNIX
File Access Control

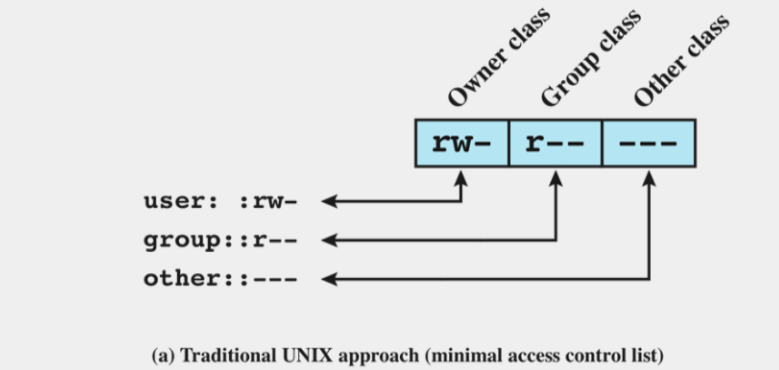

(a) Traditional UNIX approach (minimal access control list)

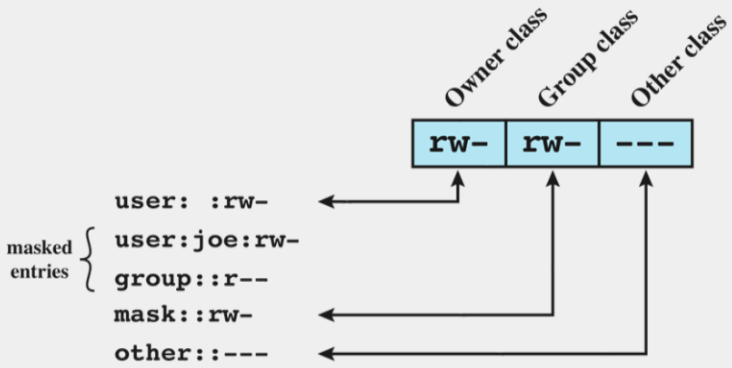

(b) Extended access control list

Figure 4.6 UNIX File Access Control

- unique user identification number (user ID)
- member of a primary group identified by a group ID
- belongs to a specific group
- 12 protection bits
  - specify read, write, and execute permission for the owner of the file, members of the group and all other users
- the owner ID, group ID, and protection bits are part of the file's inode

Traditional UNIX File Access Control

- **“set user ID”(SetUID)**
- **“set group ID”(SetGID)**
  - system temporarily uses rights of the file owner / group in addition to the real user’s rights when making access control decisions
  - enables privileged programs to access files / resources not generally accessible
- **sticky bit**
  - when applied to a directory it specifies that only the owner of any file in the directory can rename, move, or delete that file
- **superuser**
  - is exempt from usual access control restrictions
  - has system-wide access

Access Control Lists (ACLs) in UNIX

- modern UNIX systems support ACLs
  - FreeBSD, OpenBSD, Linux, Solaris
- FreeBSD
  - Setfacl command assigns a list of UNIX user IDs and groups
  - any number of users and groups can be associated with a file
  - read, write, execute protection bits
  - a file does not need to have an ACL
  - includes an additional protection bit that indicates whether the file has an extended ACL
- when a process requests access to a file system object two steps are performed:
  - step 1 selects the most appropriate ACL
    - owner, named users, owning / named groups, others
  - step 2 checks if the matching entry contains sufficient permissions

Figure 4.7

Role-Based Access Control (RBAC)

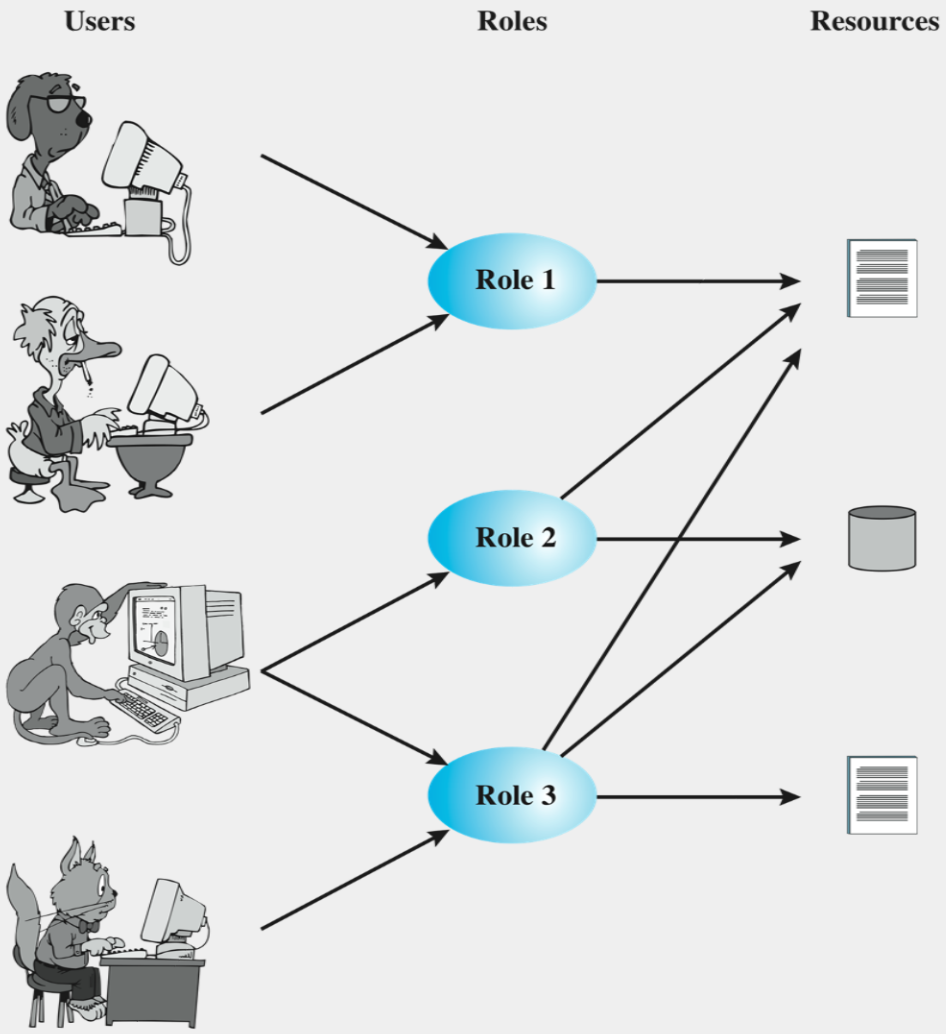

Figure 4.7 Users, Roles, and Resources

	R_1	R_2	• • •	R_n
U_1	✖			
U_2	✖			
U_3		✖		✖
U_4				✖
U_5				✖
U_6				✖
• • •				
U_m	✖			

ROLES \ OBJECTS	R_1	R_2	R_n	F_1	F_1	P_1	P_2	D_1	D_2
R_1	control	owner	owner control	read *	read owner	wakeup	wakeup	seek	owner
R_2		control		write *	execute			owner	seek *
• • •									
R_n			control		write	stop			

Figure 4.8 Access Control Matrix Representation of RBAC

Figure 4.8

Access Control Matrix

Figure 4.9

Role-Based Access Control Models

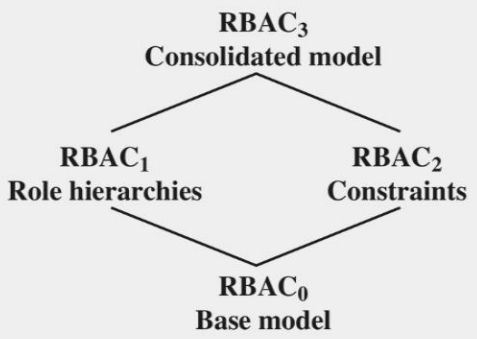

(a) Relationship among RBAC models

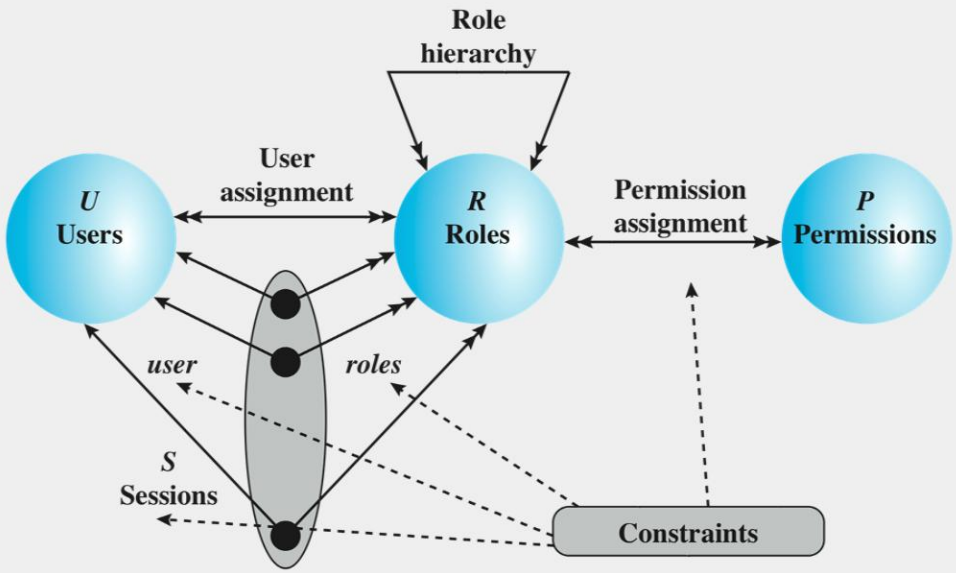

(b) RBAC models

Figure 4.9 A Family of Role-Based Access Control Models. RBAC$_0$ is the minimum requirement for an RBAC system. RBAC1 adds role hierarchies and RBAC$_2$ adds constraints. RBAC3 includes RBAC$_1$ and RBAC$_2$. [SAND96]

Constraints - RBAC

- provide a means of adapting RBAC to the specifics of administrative and security policies of an organization
- a defined relationship among roles or a condition related to roles
- types:

mutually exclusive roles	cardinality	prerequisite roles
• a user can only be assigned to one role in the set (either during a session or statically) • any permission (access right) can be granted to only one role in the set	• setting a maximum number with respect to roles	• dictates that a user can only be assigned to a particular role if it is already assigned to some other specified role

RBAC: Basic Definitions

- object
  - any system resource subject to access control, such as a file, printer, terminal, database record
- operation
  - an executable image of a program, which upon invocation executes some function for the user
- permission
  - an approval to perform an operation on one or more RBAC protected objects

Core RBAC

administrative functions	supporting system functions	review functions
• add and delete users from the set of users • add and delete roles from the set of roles • create and delete instances of user-to-role assignment • create and delete instances of permission-to-role assignment	• create a user session with a default set of active roles • add an active role to a session • delete a role from a session • check if the session subject has permission to perform a request operation on an object	• enable an administrator to view but not modify all the elements of the model and their relations

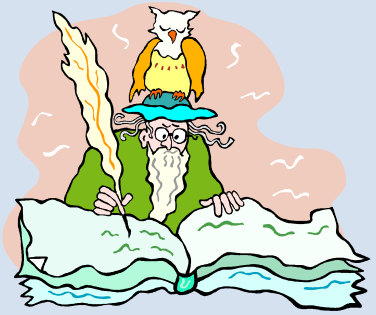

Static Separation of Duty Relations (SSD)

- enables the definition of a set of **mutually exclusive roles**, such that if a user is assigned to one role in the set, the user may not be assigned to any other role in the set
- can place a **cardinality constraint** on a set of roles
  - defined as a pair (*role set, n*) where no user is assigned to *n* or more roles from the role set
- includes administrative functions for creating and deleting role sets and adding and deleting role members
- includes review functions for viewing the properties of existing SSD sets

Dynamic Separation of Duty Relations (DSD)

- limit the permissions available to a user
- places constraints on the roles that can be activated within or across a user's sessions
- define constraints as a pair *(role set, n)*, where *n* is a natural number $n \leq 2$, with the property that no user session may activate *n* or more roles from the role set
- enables the administrator to specify certain capabilities for a user at different, non-overlapping spans of time
- includes administrative and review functions for defining and viewing DSD relations

Figure 4.12

Example of Access Control Administration

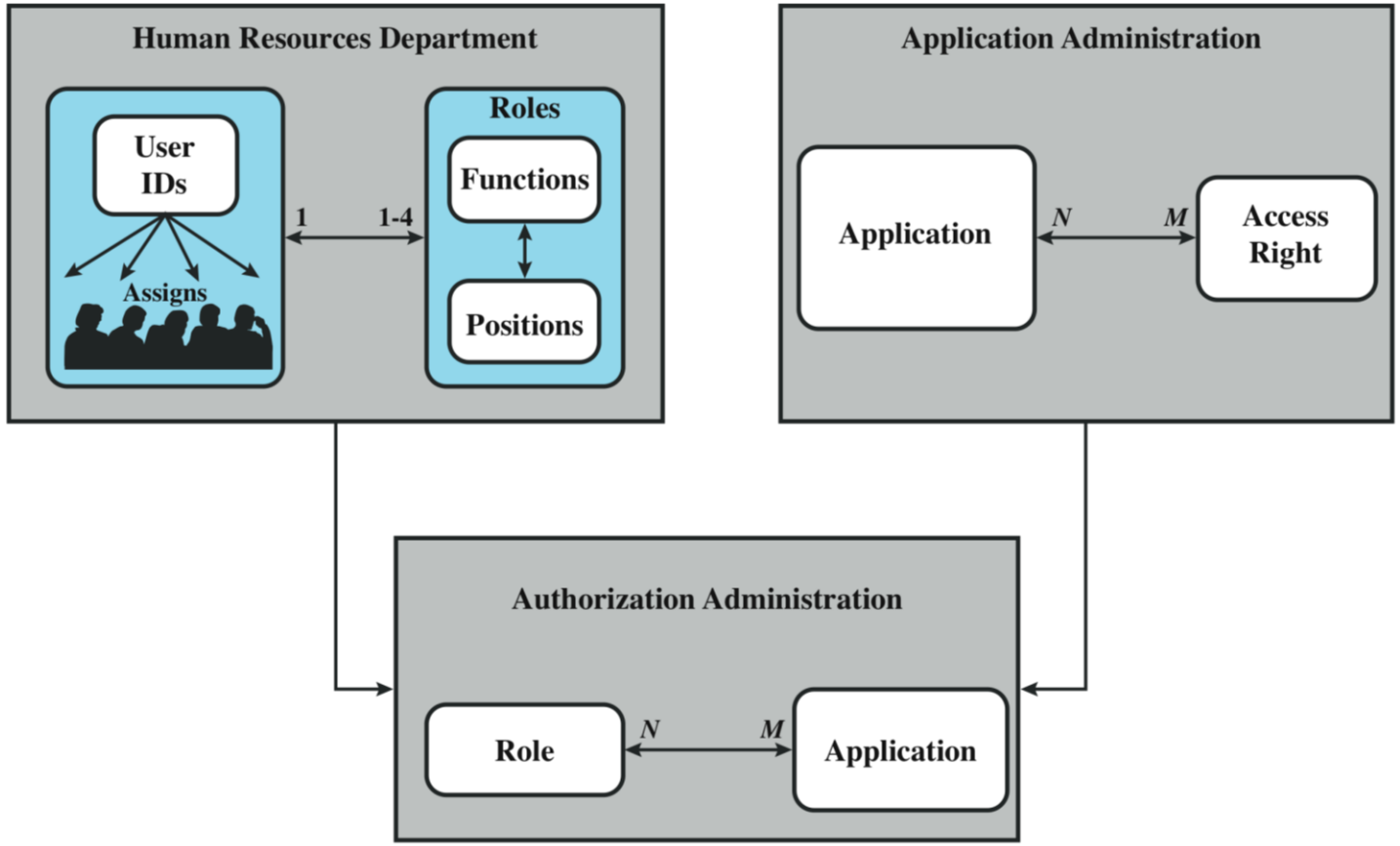

Figure 4.12 Example of Access Control Administration

Attribute-based Access Control (ABAC)

- based on policies that combine attributes together
  - user attributes, resource attributes, environment attributes, …
  - ex) age, role, job title, … / read, delete, view, … / obj type, …
- Can express a complex Boolean rule set that can evaluate different attributes
- Example
  - Policy: managers can view transactions in their region
  - policy: users with role == manager can do the action == SELECT on table == TRANSACTIONS if user.region == transaction.region

Q&A